文件编号：0 369 EA 6 900C-01

ABS9 系统下线检测规程

ABS9 System End of Line Test Instruction

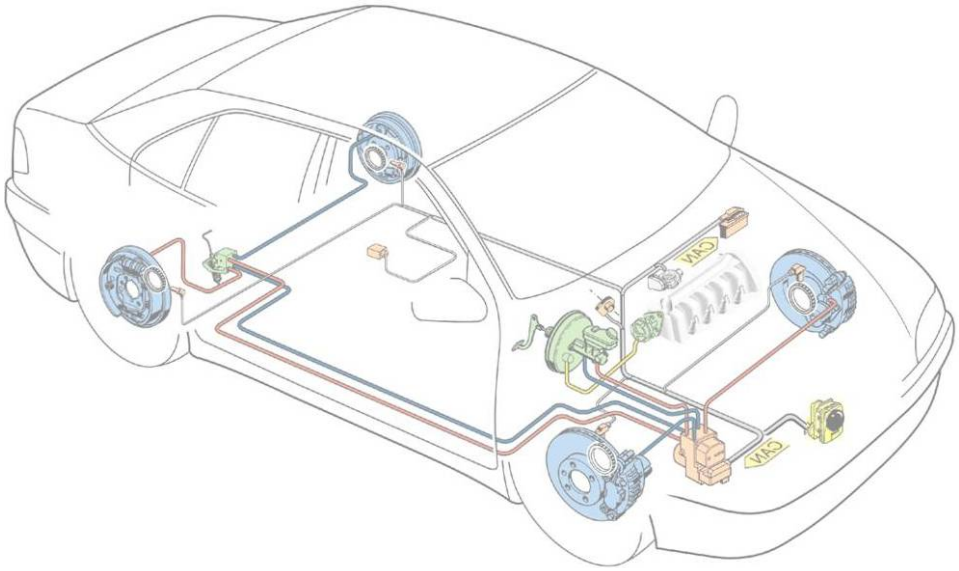

Edited by: Yang Shengkai 26.11.2013

Checked by: Zhu Qinwen 2013.11.26

Approved by: 2013.11.27

©博世保留商标和专利应用在内的所有权力，未经我公司许可不得复制或传递给第三方。

© All rights with Robert Bosch GmbH, including trademark / patent applications. Any right of disposal, as copying and distribution to third parties is ours.

修改记录 Modifications:

Ver.	Date	Chapter	Description of changes	Signature
00	06.08.2012	All	新版本 New edition	Yang Shengkai
01	26.11.2013	2	将“可选”更改为“※”，并增加备注 Chang “Optional” to “※” ,and add remark	Yang Shengkai
		4.5	将“可选”更改为“※” Chang “Optional” to “※”	
		3.2	更新动态测试表格和示意图 Update dynamic test table and diagram	
		4.11	更新动态测试过程表格 Update dynamic test process table	

©博世保留商标和专利应用在内的所有权力，未经我公司许可不得复制或传递给第三方。

© All rights with Robert Bosch GmbH, including trademark / patent applications. Any right of disposal, as copying and distribution to third parties is ours.

目录 Table of Content:

1 综述 General 4

1.1 应用 Application 4
1.2 首字母缩写 Acronyms 4

2 操作次序 Operate sequence description 5

3 下线检测过程步骤描述 EOL Process Step Description 6

3.1 轮速传感器测试（转毂驱动） Wheel Speed Sensor Test (rolls with external drive) 7
3.2 ABS 动态测试 ABS dynamic test 13

4 诊断功能 Diagnosis Function 23

4.1 建立扩展诊断模式 Start Extended Diagnostic Session 23
4.2 电子控制单元识别 ECU-Identification 24
4.3 检查系统状态 Check System Status 25
4.4 读取抽真空加注过程字节 Read E&F Process Byte 26
4.5 写入变量代码 ※ Write Variant Code ※ 27
4.6 读取故障代码 Read Status Of DTC 28
4.7 清除故障代码 Clear DTC 29
4.8 禁用速度限制和阀组继电器关闭 Speed limit and Valve relay shut down deactivation 30
4.9 开始轮速传感器测试 Start WSS Test 31
4.10 评估轮速传感器测试 Evaluation of WSS Test 32
4.11 动态测试 Dynamic Test 33
4.12 写入下线检测过程控制字节 Write EOL Test Process Control Byte 35
4.13 激活速度限制和阀组继电器关闭 Speed limit and Valve relay shut down activation 36
4.14 进入安全模式 Security Access 37
4.15 结束扩展诊断模式 End of Extended Diagnosis Session 38

5 阀保护措施和液压数据 Valve protective measures and hydraulic data 39

6 设备要求 Equipment Requirement 42

©博世保留商标和专利应用在内的所有权力，未经我公司许可不得复制或传递给第三方。

© All rights with Robert Bosch GmbH, including trademark / patent applications. Any right of disposal, as copying and distribution to third parties is ours.

1 综述 General

1.1 应用 Application

本文档适用于指导在线操作和设备开发。

This document is used as a guideline of operating online and preparing equipment.

1.2 首字母缩写 Acronyms

ABS	防抱死制动系统 antilock braking system
ABS-SILA	防抱死制动系统警告灯 ABS warning light
AV	出液阀 outlet valve
AY	加速度传感器 acceleration sensor
BLS	刹车灯开关 break light switch
DTC	诊断故障码 diagnostic trouble code
ECU	电子控制单元 electronic control unit
EV	进液阀 inlet valve
FA	前轴 front axle
FCM	故障码存储器 fault code memory
FL	前左 front left
FR	前右 front right
PB	过程字节 process byte
RA	后轴 rear axle
RFP	循环电机泵 recirculation pump
RL	后左 rear left
RR	后右 rear right
SV	电磁阀 solenoid valve
UM	电机泵反馈 pump motor feedback
WSS	轮速传感器 wheel speed sensor

©博世保留商标和专利应用在内的所有权力，未经我公司许可不得复制或传递给第三方。

© All rights with Robert Bosch GmbH, including trademark / patent applications. Any right of disposal, as copying and distribution to third parties is ours.

2 操作次序 Operate sequence description

操作步骤 Operate Step:	诊断功能 Diagnostic function:	参考章节 Details chapter:
01	建立扩展诊断模式 Start Extended Diagnostic Session	**4.1**
02	电子控制单元识别 ECU Identification	**4.2**
03	写入变量代码 ※ Write Variant Code ※	**4.5**
04	读取抽真空加注过程字节 Read E&F Process Byte	**4.4**
05	读取故障代码 Read DTC	**4.6**
06	检查系统状态（阀组与电机状态） Check system status(VR & MR status)	**4.3**
07	禁用速度限制和阀组继电器关闭 Speed limit and Valve relay shut down deactivation	**4.8**
08	轮速传感器测试 WSS Test	**4.9**
09	评估轮速传感器测试结果 Evaluation WSS Test Result	**4.10**
10	动态测试 Dynamic Test	**4.11**
11	检查系统状态（阀组与电机状态） Check system status(VR & MR status)	**4.3**
12	写入下线检测过程字节 Write EOL Process Byte	**4.12**
13	读取故障代码 Read DTC	**4.6**
14	清除故障代码 Clear DTC	**4.7**
15	激活速度限制和阀组继电器关闭 Speed limit and Valve relay shut down activation	**4.13**
16	结束扩展诊断模式 End of Extended Diagnosis Session	**4.15**

备注：※ 表示此功能并不适用于所有项目，汽车厂需要根据项目实际情况使用。
Remark: ※indicates that the function doesn't adapt to all the projects, It is used by vehicle manufactory based on the project situation.

©博世保留商标和专利应用在内的所有权力，未经我公司许可不得复制或传递给第三方。

© All rights with Robert Bosch GmbH, including trademark / patent applications. Any right of disposal, as copying and distribution to third parties is ours.

3 下线检测过程步骤描述 EOL Process Step Description

所有的博世 ABS 系统部件，如电子控制单元，液压调节模块，轮速传感器，在运输到客户装配生产厂前都单独在博世装配线上检测过。
整个系统包括汽车的接口，仪表盘的指示灯和供电电源在客户工厂第一时间组装，检测连线和功能是否正确。
电子控制单元能执行许多复杂的自我监控软件，例如连续和偶然性测试，并且在有错误的情况下识别这些错误和储存错误代码号下线检测用这个特性来读出错误代码，为修理工作提供错误识别信息
然而，有些错误不能被电子控制单元本身检测（例如液压管路或轮速传感器的交叉连接和一些输入信号的恰当的机能如制动灯开关）。为了找到这些错误，当车辆休息时应该进行静态测试，并且在测力计进行动态测试。
测试的主要内容是检测：
- 所有电子控制单元的输入输出信号功能是否正确
- 所有轮速传感器的功能是否正确（信号质量和相关性）
- 所有阀和液压部件的功能是否正确（功能和相关性）

ABS 液压处理模块以干燥状态（无制动液）提交给客户。因此它需要使用阀和泵马达的相应的诊断来在线上抽真空和加注。为了保证正确的过程，需要把一个加注字节存储到电子控制单元的 EEPROM 内，并且该值可以在下线检测中查出并验证先前的过程。
设计的整个测试过程涵盖了系统的所有重要内容并且最大程度上缩短了测试时间。

All The Bosch ABS components, such as ECU, hydraulic modulator, wheel speed sensors, are checked individually in the Bosch assembly line prior to shipment to the customers assembly plants.
The entire system including harnesses, dashboard lights and power supply of the vehicle is assembled the first time at the customer plant and must be checked for proper connections and functions.
The ECU is capable to run a number of complexity self monitoring software features, such as continuity and plausibility checks and in case of errors to identify these faults and to store fault code numbers.
This feature is used at the end of line test by reading out the fault codes as error identification as well as information for repair works.
However, some of the failures can not be detected by the ECU itself (such as cross connections of hydraulic pipes or wheel speed sensors and correct functioning of some input signals, i.e. brake light switch). In order to find these failures static or dynamic tests should be performed while the vehicle is at rest or during a dynamic test on a dynamometer.
The major items of this test steps is to check for:
- correct functioning of all input and output signals of the ECU
- correct functioning of all wheel speed sensors (signal quality and correlation)
- correct functioning of all valves and hydraulic components (functioning and correlation)

The ABS hydraulic modulator is shipped to the customer in a dry state (no brake fluid). Therefore it needs to be evacuated and filled on line by using diagnosis for valve and pump motor activation's. To ensure the proper process, a process byte can be stored in the EEPROM of the ECU. The value of the byte can be checked at the end of line test to verify the previous processes.
The entire test procedure is designed to cover all the important items of the system and to minimize the testing time.

©博世保留商标和专利应用在内的所有权力，未经我公司许可不得复制或传递给第三方。

© All rights with Robert Bosch GmbH, including trademark / patent applications. Any right of disposal, as copying and distribution to third parties is ours.

3.1 轮速传感器测试（转毂驱动） Wheel Speed Sensor Test (rolls with external drive)

本文件描述了两种方式进行传感器的相关性测试：
方式 1. 转毂顺序转动（同速不同时）
方式 2. 转毂各自以不同速度转动，可以减少时间但需要转毂支持（同时不同速）
This document described two versions for the wheel speed sensor test corresponding of the exist test bench.
One kind of wheel speed sensor should be used.
Version 1: All roller pairs will be actuate one after the other.
Version 2: The second solution allows a shorter process time but a test bench is needed with the ability to drive the roller pairs together with different speed values.

方式 1： Version 1:

轮速传感器测试（相关性和信号质量检测；方式一） Wheel speed sensor test (correlation and signal quality check; Version 1)					
Test bench:			ECU data:		Requested data:
Roll front left Roll front right Roll rear left Roll rear right	On; 5 km/h Off; 0 km/h Off; 0 km/h Off; 0 km/h		Wheel FL: min/max Wheel FR: min/max Wheel RL: min/max Wheel RR: min/max	xx km/h xx km/h xx km/h xx km/h	4,5 km/h < xx < 5,5 km/h 0,0 km/h < xx < 1,0 km/h 0,0 km/h < xx < 1,0 km/h 0,0 km/h < xx < 1,0 km/h
Roll front left Roll front right Roll rear left Roll rear right	On; 5 km/h On; 5 km/h Off; 0 km/h Off; 0 km/h		Wheel FL: min/max Wheel FR: min/max Wheel RL: min/max Wheel RR: min/max	xx km/h xx km/h xx km/h xx km/h	4,5 km/h < xx < 5,5 km/h 4,5 km/h < xx < 5,5 km/h 0,0 km/h < xx < 1,0 km/h 0,0 km/h < xx < 1,0 km/h
Roll front left Roll front right Roll rear left Roll rear right	On; 5 km/h On; 5 km/h On; 5 km/h Off; 0 km/h		Wheel FL: min/max Wheel FR: min/max Wheel RL: min/max Wheel RR: min/max	xx km/h xx km/h xx km/h xx km/h	4,5 km/h < xx < 5,5 km/h 4,5 km/h < xx < 5,5 km/h 4,5 km/h < xx < 5,5 km/h 0,0 km/h < xx < 1,0 km/h
Roll front left Roll front right Roll rear left Roll rear right	On; 5 km/h On; 5 km/h On; 5 km/h On; 5 km/h		Wheel FL: min/max Wheel FR: min/max Wheel RL: min/max Wheel RR: min/max	xx km/h xx km/h xx km/h xx km/h	4,5 km/h < xx < 5,5 km/h 4,5 km/h < xx < 5,5 km/h 4,5 km/h < xx < 5,5 km/h 4,5 km/h < xx < 5,5 km/h
Roll front left Roll front right Roll rear left Roll rear right	On; 5 km/h On; 5 km/h On; 5 km/h On; 5 km/h		Wheel FL: min/max Wheel FR: min/max Wheel RL: min/max Wheel RR: min/max	xx km/h xx km/h xx km/h xx km/h	4,5 km/h < xx < 5,5 km/h 4,5 km/h < xx < 5,5 km/h 4,5 km/h < xx < 5,5 km/h 4,5 km/h < xx < 5,5 km/h

备注：
这里所列的数据值仅供参考，最终数据值需制造商通过试验来确定。
为了检测传感器的相关性（连接传感器与相应的车轮），测试设备逐一地带动各个车轮。测试速度必须匹配测力计设计（如测试速度为5千米/小时）。
测试设备记录了来自电子控制单元的轮速数据并验证这些信号。
测试信号质量需要在所有的车轮转动时的条件下进行（可以在相关性测试结束后立即进行）。

©博世保留商标和专利应用在内的所有权力，未经我公司许可不得复制或传递给第三方。

© All rights with Robert Bosch GmbH, including trademark / patent applications. Any right of disposal, as copying and distribution to third parties is ours.

轮速传感器测试时，电子控制单元将运行系统固化的程序。在整个测试过程中，电子控制单元会记录每个轮速传感器至少旋转一周的轮速数据，同时电子控制单元会存储测试期间的最小最大的速度数据，并在测试完成以后输出数据给测试设备。
测试实验台计算机评估这些数据，并与设备设定的速度的门限值进行比较。

传感器错误测出 ⇒ 错误消息，继续
没有错误测出 ⇒ 继续

Remarks:
The speed of the min/max values are proposals and should be defind by trails of the manufacturer.
To check the correlation of the sensors (connection of sensor to the corresponding wheel), the test rig turns on the individual rolls one after the other. The test speed must be adapted to the dynamometer design. (e.g. test speed = 5 km/h).
The tester records the wheel speed data received from the ECU and verifies the signals.
During the signal quality test, all rolls will be turned on (this step will be executed immediately after the correlation test).
The ECU runs an internal routine that records all sensor data over at least one revolution, stores the minimum and maximum speed data of each wheel during the test time and outputs these data to the tester after the test has been finished.
The test bench computer evaluates these data and compares them with internal limit data.

Sensor failure detected ⇒ Failure message, continue
No failures detected ⇒ Continue

轮速传感器误差计算：
Bosch 建议允许公差： ±10%

For calculation of the allowed WSS tolerance:
V rolls = 5km/h
WSSmin = 5km/h – 10% = 4,5 km/h
WSSmax =5km/h + 10% = 5,5 km/h

Bosch recommends tolerance: ±10%

这里的误差计算考虑到胎压的影响，测试台和 ECU 的误差影响，最终的公差值应充分考虑上述影响，由客户通过试验来确定。

The given tolerances are calculated concerning of tyre pressure, tolerance of the test bench and the ECU electrical circuit tolerance. The valid tolerance must be found and confirmed by trials at the customer.

©博世保留商标和专利应用在内的所有权力，未经我公司许可不得复制或传递给第三方。

© All rights with Robert Bosch GmbH, including trademark / patent applications. Any right of disposal, as copying and distribution to third parties is ours.

方式 1 测试图表： Version 1 Test diagram:

轮速传感器测试（安装位置，相关性和信号质量检测）
Wheel speed sensor test (mounting position, correlation and signal quality check)

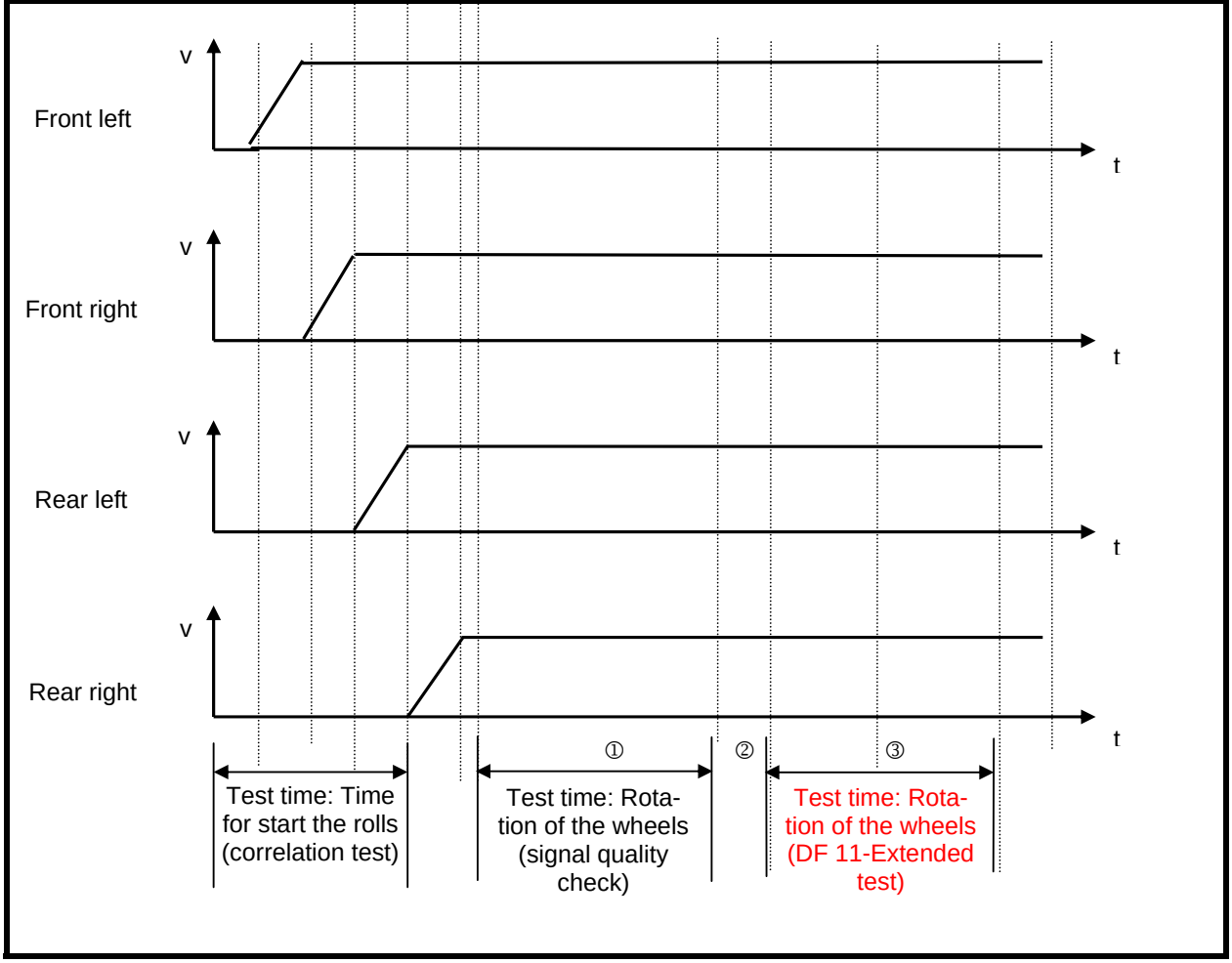

备注：
测试设备过转毂逐步分别驱动各个车轮，同时测试设备索要传感器的轮速数据并验证其相关性。为了识别有关传感器，带齿的车轮，气隙或偏离的错误，电子控制单元每10毫秒对每个轮速传感器的轮速检测一次，存储并输出速度数据的最大值和最小值（在测试期间）。

Remarks:
The test rig turns on the individual rolls by external drives step by step while the tester request the speed data of the sensors and checks the correct correlation. The ECU internally picks up each sensor speed every 10 ms, stores and outputs the minimum and maximum speed data (within the test time) in order to identify faults of the sensor, toothed wheels, air gaps or eccentricities.

©博世保留商标和专利应用在内的所有权力，未经我公司许可不得复制或传递给第三方。

© All rights with Robert Bosch GmbH, including trademark / patent applications. Any right of disposal, as copying and distribution to third parties is ours.

方式 2： Version 2:

轮速传感器测试（相关性和信号质量检测；方式二） Wheel speed sensor test (correlation and signal quality check; Version 2)				
Test stand:		ECU data:		Requested data:
Roll front left	On; 3 km/h	Wheel FL : min/max	xx km/h	2,7 km/h < xx < 3,3 km/h
Roll front right	On; 6 km/h	Wheel FR : min/max	xx km/h	5,4 km/h < xx < 6,6 km/h
Roll rear left	On: 9 km/h	Wheel RL : min/max	xx km/h	8,1 km/h < xx < 9,9 km/h
Roll rear right	On; 12 km/h	Wheel RR : min/max	xx km/h	10,8 km/h < xx < 13,2 km/h

备注：
每对转毂的最大最小速度应通过试验来确定。
为了检测传感器的相关性（连接传感器与相应的车轮）和信号的质量，转毂各自分别转动，速度应和设备相适应，例如：3，6，9，12 km/h。
设备应记录下 ECU 发出来的各轮的速度值并检验，在测试中所有转毂都是转动的。
轮速传感器测试时，电子控制单元将运行系统固化的程序。在整个测试过程中，电子控制单元会记录每个轮速传感器至少旋转一周的轮速数据，同时电子控制单元会存储测试期间的最小最大的速度数据，并在测试完成以后输出数据给测试设备。
测试实验台计算机评估这些数据，并与设备设定的速度的门限值进行比较。

传感器错误测出 ⇒ 错误消息，继续
没有错误测出 ⇒ 继续

Remarks:

The speed of the once roller pairs and the min/max values are proposals and should be defined by trails of the manufacturer.

To check the correlation (connection of sensor to the corresponding wheel) and signal quality of the sensors, the test rig turns on the individual rolls together. The test speed must be adapted to the dynamometer design, e.g. test speed = 3, 6, 9, 12 km/h.

The tester records the wheel speed data received from the ECU and verifies the signals.

During the test, all rolls will be turned on.

The ECU runs an internal routine that records all sensor data at one revolution, stores the minimum and maximum speed data of each wheel during the test time and outputs these data to the tester after the test has been finished.

The test bench computer evaluates these data and compares them with internal limit data.

Sensor failure detected ⇒ Failure message, continue
No failures detected ⇒ Continue

©博世保留商标和专利应用在内的所有权力，未经我公司许可不得复制或传递给第三方。

© All rights with Robert Bosch GmbH, including trademark / patent applications. Any right of disposal, as copying and distribution to third parties is ours.

方式 2 测试图表： Version 2 Test diagram:

轮速传感器测试（相关性和信号质量检测）
Wheel speed sensor test (correlation and signal quality check)

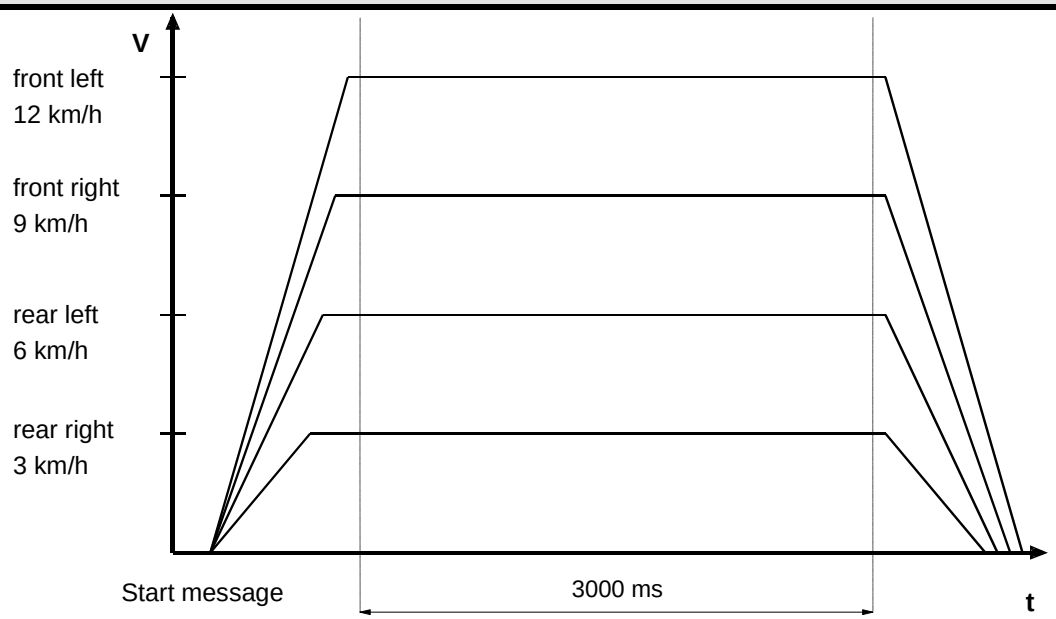

Signal quality and correlation check one rotation of the wheels
The values are examples und must be defined by the customer

备注：
测试设备过转毂逐步分别驱动各个车轮，同时测试设备索要传感器的轮速数据并验证其相关性。为了识别有关传感器，带齿的车轮，气隙或偏离的错误，电子控制单元每10毫秒对每个轮速传感器的轮速检测一次，存储并输出速度数据的最大值和最小值（在测试期间）。

Remarks:
The test rig turns on the individual rolls by external drives step by step while the tester request the speed data of the sensors and checks the correct correlation. The ECU internally picks up each sensor speed every 10 ms, stores and outputs the minimum and maximum speed data (within the test time) in order to identify faults of the sensor, toothed wheels, air gaps or eccentricities.

如果车轮速度超过 10km/h，ECU 将无法进入客户生产线诊断模式，没有任何响应。这时可以关闭速度限制来进行测试。
If the vehicle speed is more than 10Km/h, the ECU can not change into the Customer Plant Diagnostic mode and does not respond to any request. The speed limit must be deactivated if speed increase to more than 10 Km/h.

©博世保留商标和专利应用在内的所有权力，未经我公司许可不得复制或传递给第三方。

© All rights with Robert Bosch GmbH, including trademark / patent applications. Any right of disposal, as copying and distribution to third parties is ours.

信号质量测试（以一个车轮的为例）Signal quality test (example of one wheel):

信号质量测试（以一个车轮的为例）Signal quality test (example of one wheel):

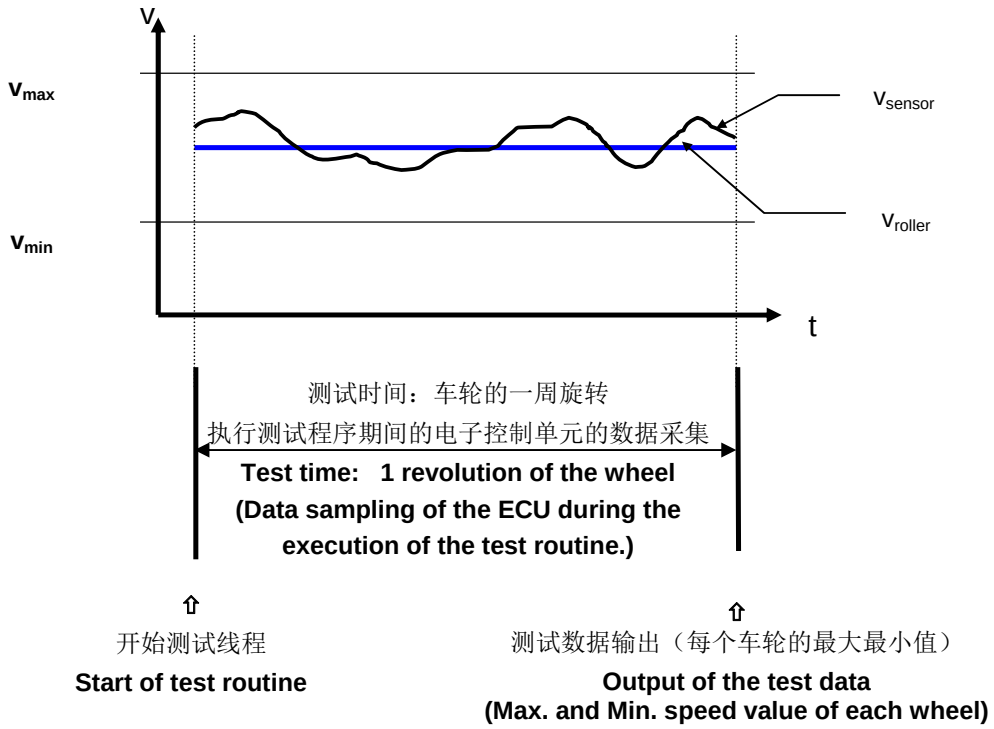

测试步骤：
1.程序开始后，电子控制单元会在整个执行期间连续采集所有车轮的轮速数据，并检测最大值和最小值。
2.ECU 将数据传输给测试设备。
3.测试设备对接收的轮速数据与设定的门限值进行对比。
备注：
门限值的设定必须能够满足规定的轮速信号公差的要求。

Test Step:
1.After the routine has been started, the ECU will continuously sample all wheel speed data and check for the minimum and the maximum value during the execution time.
2.This data is transmitted to the test equipment.
3.The test equipment must evaluate this data and compare with given limits.
Remarks:
The limits are defined to meet the specified tolerances of the wheel speed signals.

©博世保留商标和专利应用在内的所有权力，未经我公司许可不得复制或传递给第三方。

© All rights with Robert Bosch GmbH, including trademark / patent applications. Any right of disposal, as copying and distribution to third parties is ours.

3.2 ABS 动态测试 ABS dynamic test

概述 General description
本文件描述了两种方式进行 ABS 动态测试：
方式 1. 采用力值测试
方式 2. 采用速度测试（高速）
This document described two versions for the ABS dynamic test :
Version 1: Test via measuring force value.
Version 2: Test via measuring speed value（high speed）.

方式 1： Version 1:

ABS 动态测试 (电磁阀功能测试和阀体关系测试) Dynamic ABS Test (Solenoid valve functional test and valve correlation test)				
操作员：Operator:	测试设备： Test Rig:	制动力（牛顿）： Brake Force (N):		要求值（牛顿）： Demand Data (N):
实施制动 Apply Brake Pedal	所有车轮增压 Pressure increase at all wheels 测量制动力 Measure Brake Forces	前左轮 Wheel FL: 前右轮 Wheel FR: 后左轮 Wheel RL: 后右轮 Wheel RR:	xx N xx N xx N xx N	1500 N < F < 2000 N 1500 N < F < 2000 N 1000 N < F < 1500 N 1000 N < F < 1500 N
保持制动踏板恒定 Keep Brake Pedal constant	解除前左轮制动力 Pressure Release FL 测量制动力 Measure Brake Forces	前左轮 Wheel FL: 前右轮 Wheel FR: 后左轮 Wheel RL: 后右轮 Wheel RR:	xx N xx N xx N xx N	0 N < F < 400 N 1500 N < F < 2000 N 1000 N < F < 1500 N 1000 N < F < 1500 N
保持制动踏板恒定 Keep Brake Pedal constant	增加前左轮制动力 Pressure Increase FL 测量制动力 Measure Brake Forces	前左轮 Wheel FL: 前右轮 Wheel FR: 后左轮 Wheel RL: 后右轮 Wheel RR:	xx N xx N xx N xx N	1500 N < F < 2000 N 1500 N < F < 2000 N 1000 N < F < 1500 N 1000 N < F < 1500 N
保持制动踏板恒定 Keep Brake Pedal constant	解除前右轮制动力 Pressure Release FR 测量制动力 Measure Brake Forces	前左轮 Wheel FL: 前右轮 Wheel FR: 后左轮 Wheel RL: 后右轮 Wheel RR:	xx N xx N xx N xx N	1500 N < F < 2000 N 0 N < F < 400 N 1000 N < F < 1500 N 1000 N < F < 1500 N
保持制动踏板恒定 Keep Brake Pedal constant	增加前右轮制动力 Pressure Increase FR 测量制动力 Measure Brake Forces	前左轮 Wheel FL: 前右轮 Wheel FR: 后左轮 Wheel RL: 后右轮 Wheel RR:	xx N xx N xx N xx N	1500 N < F < 2000 N 1500 N < F < 2000 N 1000 N < F < 1500 N 1000 N < F < 1500 N
保持制动踏板恒定 Keep Brake Pedal constant	解除后左轮制动力 Pressure Release RL 测量制动力 Measure Brake Forces	前左轮 Wheel FL: 前右轮 Wheel FR: 后左轮 Wheel RL: 后右轮 Wheel RR:	xx N xx N xx N xx N	1500 N < F < 2000 N 1500 N < F < 2000 N 0 N < F < 250 N 1000 N < F < 1500 N

©博世保留商标和专利应用在内的所有权力，未经我公司许可不得复制或传递给第三方。

© All rights with Robert Bosch GmbH, including trademark / patent applications. Any right of disposal, as copying and distribution to third parties is ours.

保持制动踏板恒定 Keep Brake Pedal constant	增加后左轮制动力 Pressure Increase RL 测量制动力 Measure Brake Forces	前左轮 Wheel FL: 前右轮 Wheel FR: 后左轮 Wheel RL: 后右轮 Wheel RR:	xx N xx N xx N xx N	1500 N < F < 2000 N 1500 N < F < 2000 N 1000 N < F < 1500 N 1000 N < F < 1500 N
保持制动踏板恒定 Keep Brake Pedal constant	解除后右轮制动力 Pressure Release RR 测量制动力 Measure Brake Forces	前左轮 Wheel FL: 前右轮 Wheel FR: 后左轮 Wheel RL: 后右轮 Wheel RR:	xx N xx N xx N xx N	1500 N < F < 2000 N 1500 N < F < 2000 N 1000 N < F < 1500 N 0 N < F < 250 N
保持制动踏板恒定 Keep Brake Pedal constant	增加后右轮制动力 Pressure Increase RR 测量制动力 Measure Brake Forces	前左轮 Wheel FL: 前右轮 Wheel FR: 后左轮 Wheel RL: 后右轮 Wheel RR:	xx N xx N xx N xx N	1500 N < F < 2000 N 1500 N < F < 2000 N 1000 N < F < 1500 N 1000 N < F < 1500 N
放开制动踏板 Release Brake Pedal	回复阀门状态 Deactivate valves			

备注:
为防止阀体过热，在抽真空加注或排气后至少 5 分钟后才能进行动态测试。
在动态测试过程中的注意事项：
必须确保测试程序正确。
在测试过程中应保证阀组继电器不能关闭。

当动态测试结束后，应再次启动监控：
1. 禁用阀组继电器关闭
2. 执行动态测试
3. 启用阀组继电器关闭

如测试的速度超过 10km/h 则测试时应取消速度限制。
在试验过程中操作员应该保持制动踏板恒定。
测试设备测量制动力，在分别的卸压和恢复过程中测量制动力值来验证阀体功能和阀体关系是否正确。
阀体的激励时间和制动力的测量时间必须与测力计和车的配置相匹配。
评价可以采用测量制动力或转毂的减速度，也可以是车轮的减速度。
在基础制动测试完成时所有的进液阀都是关闭的。
在动态测试过程中测试软件顺序开启相应阀门实现增压减压的循环。
ECU 记录数据并可以传给测试设备进行进一步的评估。
所涉及到的门限值均应是与车辆相关的经验值，所列数据仅供参考。

ABS 动态测试通过 ⇒ 继续
ABS 动态测试不通过 ⇒ 记录错误信息，继续

©博世保留商标和专利应用在内的所有权力，未经我公司许可不得复制或传递给第三方。

© All rights with Robert Bosch GmbH, including trademark / patent applications. Any right of disposal, as copying and distribution to third parties is ours.

Remarks:
To prevent a overheating of the coils it is necessary to wait a minimum time of 5 minutes after the evac/fill process or repair bleeding process until the start of the function base brake and dynamic test.
At the execution of the dynamic test there is something to note:
This is necessary to guarantee a correct course of the test.
The valve relay may not switch off during the dynamic test.

After the execution of the dynamic test it is necessary to activate the monitoring again.
1. Valve Relay shut down deactivation
2. Execution of the dynamic test
3. Valve Relay shut down activation

The speed limit should be deactivated when test speed more than 10 km/h.
The operator must keep the brake pedal constant during the entire execution of the test.
The base brake test is defined to check the performance of the foundation brake system.
The evaluation can be done by measuring the brake forces or deceleration rates of the rollers. It can also be done by evaluating the deceleration rates of the wheels out of the ECU data.
The dynamic test is designed to check the correct correlation, function and tightness of the valves and the correlation of the wheel speed sensors.
At the end of the base brake test the inlet valves are switched to pressure hold.
The tester software turns the individual valves into pressure release and pressure increase cycles during the dynamic test.
This deceleration rates are measured by the ECU and transmitted to the tester for further evaluation and comparison with given limits.
The timing of valve actuation and deceleration measuring times must be adapted onto the dynamics of the dynamometer and the vehicle configuration.

The limits of the force rates must be set according to the given measuring times and the deceleration rates out of the base brake test as a reference of the initial brake apply, all data only for reference.

Dynamic ABS Test OK ⇒ Continue
Dynamic ABS Test NOK ⇒ Failure message, continue

©博世保留商标和专利应用在内的所有权力，未经我公司许可不得复制或传递给第三方。

© All rights with Robert Bosch GmbH, including trademark / patent applications. Any right of disposal, as copying and distribution to third parties is ours.

ABS 动态测试示意图（方式 1) ABS Dynamic test diagram(Version 1)

ABS 动态测试 ABS Dynamic Test

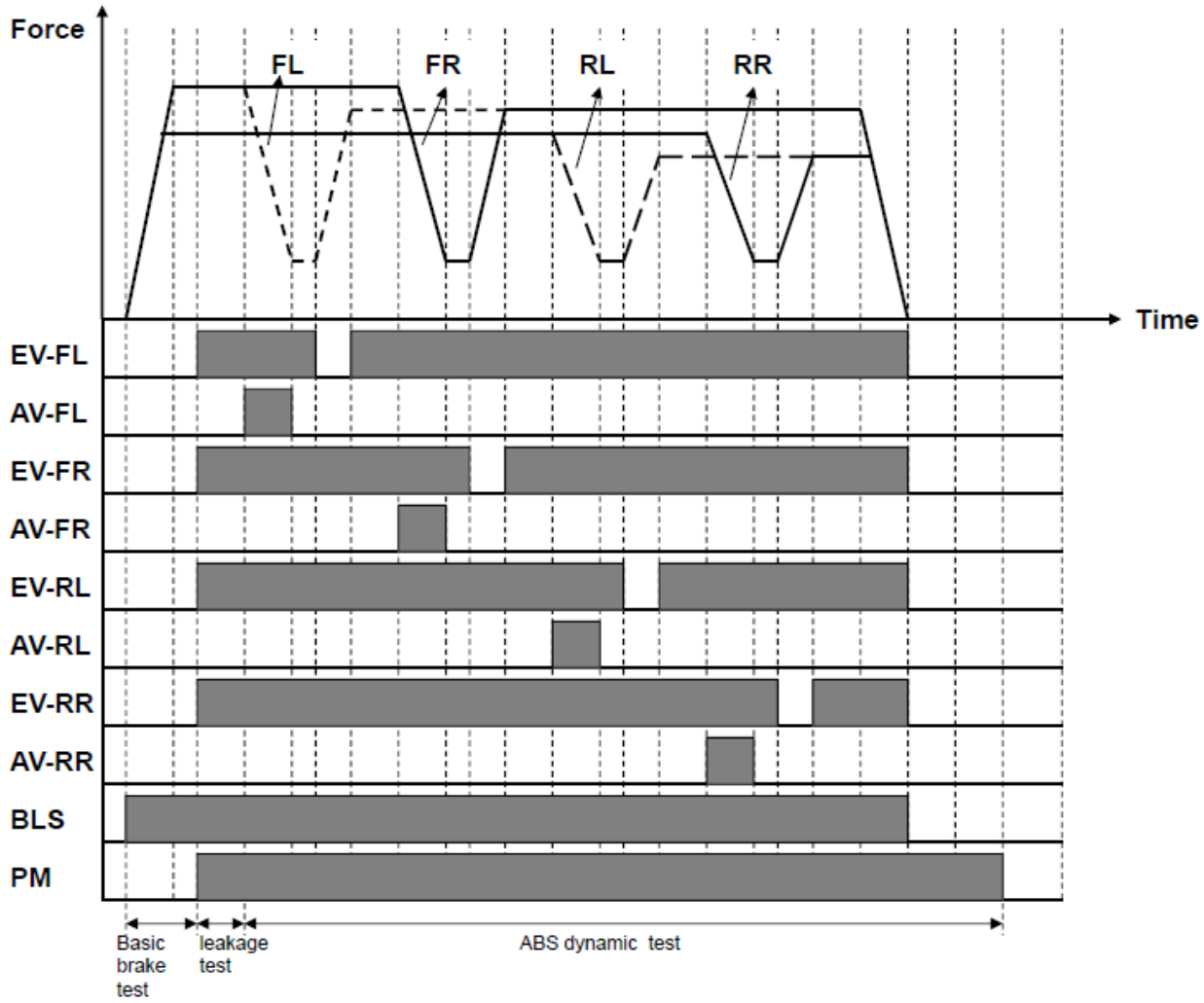

请注意阀的最大作动时间! Please note the maximum valve actuation time!

©博世保留商标和专利应用在内的所有权力，未经我公司许可不得复制或传递给第三方。

© All rights with Robert Bosch GmbH, including trademark / patent applications. Any right of disposal, as copying and distribution to third parties is ours.

方式 2： **Version 2:**

ABS 动态测试 (电磁阀功能测试和阀体关系测试) Dynamic ABS Test (Solenoid valve functional test and valve correlation test)				
操作员：Operator:	测试设备： Test Rig:	电子控制单元数据： ECU Data:		要求值（千米/时）： Demand Data (km/h):
实施制动 Apply Brake Pedal	所有车轮增压 Pressure increase at all wheels 测量速度差 Measure decelerations	前左轮 Wheel FL: 前右轮 Wheel FR: 后左轮 Wheel RL: 后右轮 Wheel RR:	Δ xx km/h Δ xx km/h Δ xx km/h Δ xx km/h	Δ xx ＞ tbd km/h Δ xx ＞ tbd km/h Δ xx ＞ tbd km/h Δ xx ＞ tbd km/h
保持制动踏板恒定 Keep Brake Pedal constant	解除前左轮制动力 Pressure Release FL 测量速度差 Measure decelerations	前左轮 Wheel FL: 前右轮 Wheel FR: 后左轮 Wheel RL: 后右轮 Wheel RR:	Δ xx km/h Δ xx km/h Δ xx km/h Δ xx km/h	Δ xx ＜ tbd km/h Δ xx ＞ tbd km/h Δ xx ＞ tbd km/h Δ xx ＞ tbd km/h
保持制动踏板恒定 Keep Brake Pedal constant	增加前左轮制动力 Pressure Increase FL 测量速度差 Measure decelerations	前左轮 Wheel FL: 前右轮 Wheel FR: 后左轮 Wheel RL: 后右轮 Wheel RR:	Δ xx km/h Δ xx km/h Δ xx km/h Δ xx km/h	Δ xx ＞ tbd km/h Δ xx ＞ tbd km/h Δ xx ＞ tbd km/h Δ xx ＞ tbd km/h
保持制动踏板恒定 Keep Brake Pedal constant	解除前右轮制动力 Pressure Release FR 测量速度差 Measure decelerations	前左轮 Wheel FL: 前右轮 Wheel FR: 后左轮 Wheel RL: 后右轮 Wheel RR:	Δ xx km/h Δ xx km/h Δ xx km/h Δ xx km/h	Δ xx ＞ tbd km/h Δ xx ＜ tbd km/h Δ xx ＞ tbd km/h Δ xx ＞ tbd km/h
保持制动踏板恒定 Keep Brake Pedal constant	增加前右轮制动力 Pressure Increase FR 测量速度差 Measure decelerations	前左轮 Wheel FL: 前右轮 Wheel FR: 后左轮 Wheel RL: 后右轮 Wheel RR:	Δ xx km/h Δ xx km/h Δ xx km/h Δ xx km/h	Δ xx ＞ tbd km/h Δ xx ＞ tbd km/h Δ xx ＞ tbd km/h Δ xx ＞ tbd km/h
保持制动踏板恒定 Keep Brake Pedal constant	解除后左轮制动力 Pressure Release RL 测量速度差 Measure decelerations	前左轮 Wheel FL: 前右轮 Wheel FR: 后左轮 Wheel RL: 后右轮 Wheel RR:	Δ xx km/h Δ xx km/h Δ xx km/h Δ xx km/h	Δ xx ＞ tbd km/h Δ xx ＞ tbd km/h Δ xx ＜ tbd km/h Δ xx ＞ tbd km/h
保持制动踏板恒定 Keep Brake Pedal constant	增加后左轮制动力 Pressure Increase RL 测量速度差 Measure decelerations	前左轮 Wheel FL: 前右轮 Wheel FR: 后左轮 Wheel RL: 后右轮 Wheel RR:	Δ xx km/h Δ xx km/h Δ xx km/h Δ xx km/h	Δ xx ＞ tbd km/h Δ xx ＞ tbd km/h Δ xx ＞ tbd km/h Δ xx ＞ tbd km/h
保持制动踏板恒定 Keep Brake Pedal constant	解除后右轮制动力 Pressure Release RR 测量速度差 Measure decelerations	前左轮 Wheel FL: 前右轮 Wheel FR: 后左轮 Wheel RL: 后右轮 Wheel RR:	Δ xx km/h Δ xx km/h Δ xx km/h Δ xx km/h	Δ xx ＞ tbd km/h Δ xx ＞ tbd km/h Δ xx ＞ tbd km/h Δ xx ＜ tbd km/h
保持制动踏板恒定 Keep Brake Pedal constant	增加后右轮制动力 Pressure Increase RR 测量速度差 Measure decelerations	前左轮 Wheel FL: 前右轮 Wheel FR: 后左轮 Wheel RL: 后右轮 Wheel RR:	Δ xx km/h Δ xx km/h Δ xx km/h Δ xx km/h	Δ xx ＞ tbd km/h Δ xx ＞ tbd km/h Δ xx ＞ tbd km/h Δ xx ＞ tbd km/h

©博世保留商标和专利应用在内的所有权力，未经我公司许可不得复制或传递给第三方。

© All rights with Robert Bosch GmbH, including trademark / patent applications. Any right of disposal, as copying and distribution to third parties is ours.

放开制动踏板 Release Brake Pedal	回复阀门状态 Deactivate valves			

注：
速度降低的门限值必须根据不同的测试设备和车型来决定。

Remark:
The limits of the deceleration rates must be individually suited per the dynamic behavior of the vehicle on the test rig!.

©博世保留商标和专利应用在内的所有权力，未经我公司许可不得复制或传递给第三方。

© All rights with Robert Bosch GmbH, including trademark / patent applications. Any right of disposal, as copying and distribution to third parties is ours.

ABS 动态测试示意图（方式 2) ABS Dynamic test diagram(Version 2)

ABS 动态测试 ABS Dynamic Test

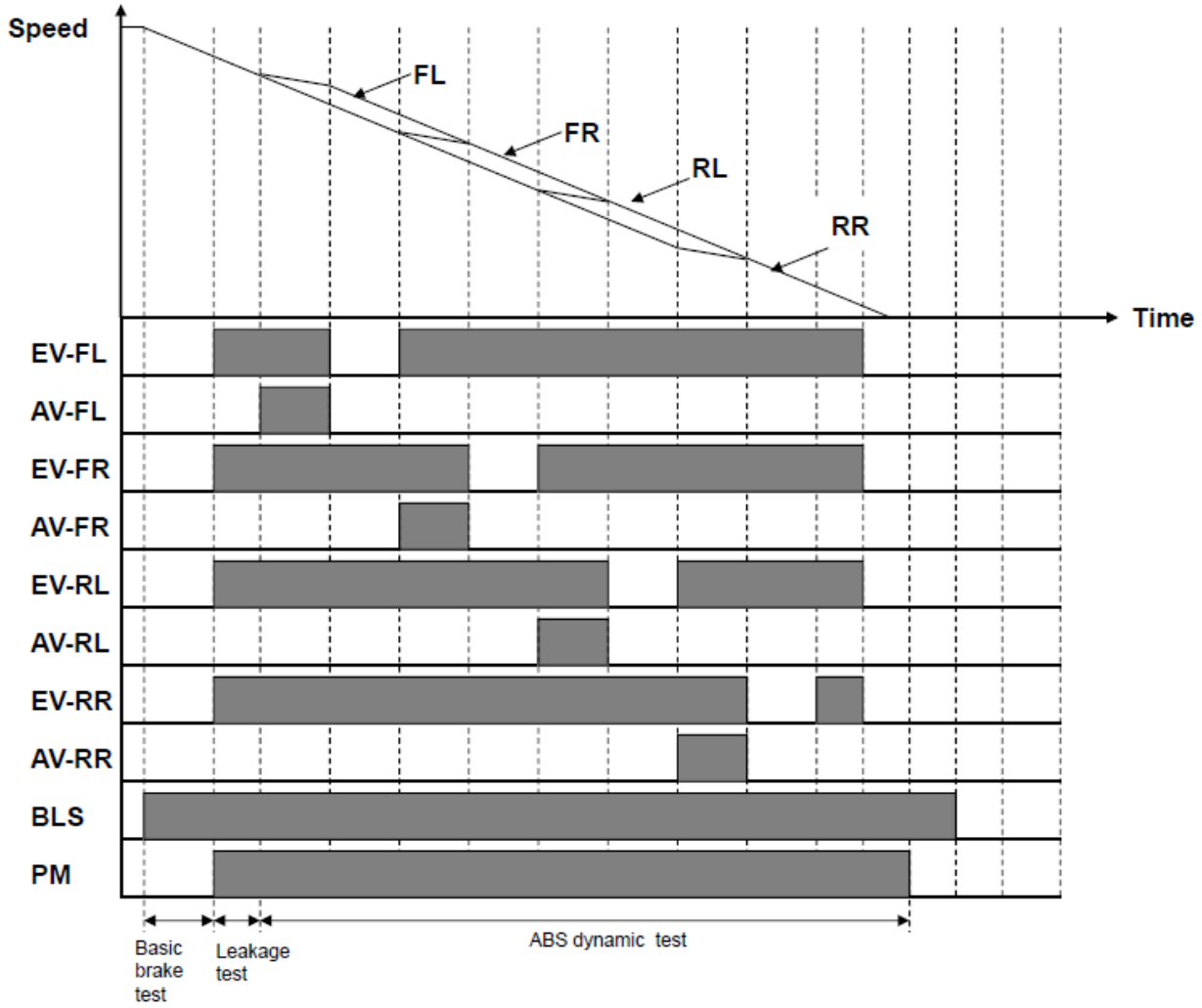

请注意阀的最大作动时间! Please note the maximum valve actuation time!

©博世保留商标和专利应用在内的所有权力，未经我公司许可不得复制或传递给第三方。

© All rights with Robert Bosch GmbH, including trademark / patent applications. Any right of disposal, as copying and distribution to third parties is ours.

动态测试 ABS 液压功能图 Schematic Diagram of ABS Dynamic Test HU Functions

增压 Function Pressure apply (increase function)

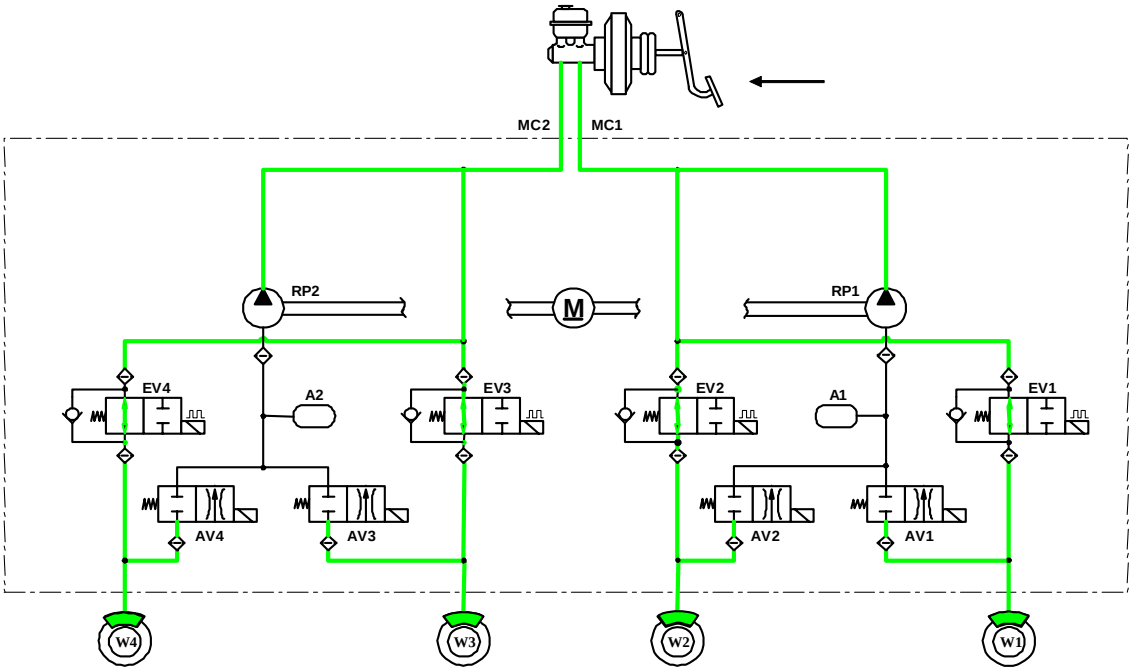

备注:
所有的阀都没有被驱动，进液阀常开，出液阀常闭。通过踩制动踏板，在轮缸处建立与主缸相同的压力。
此项功能用于增压循环。

Remarks:
All valves are not energized, inlet valves normally open, outlet valves normally closed.
The pressure in the callipers, applied by the brake pedal, will be the same as the master cylinder pressure.
This function is used for the pressure increase cycles.

©博世保留商标和专利应用在内的所有权力，未经我公司许可不得复制或传递给第三方。

© All rights with Robert Bosch GmbH, including trademark / patent applications. Any right of disposal, as copying and distribution to third parties is ours.

保压 Function Pressure Maintain (hold function)

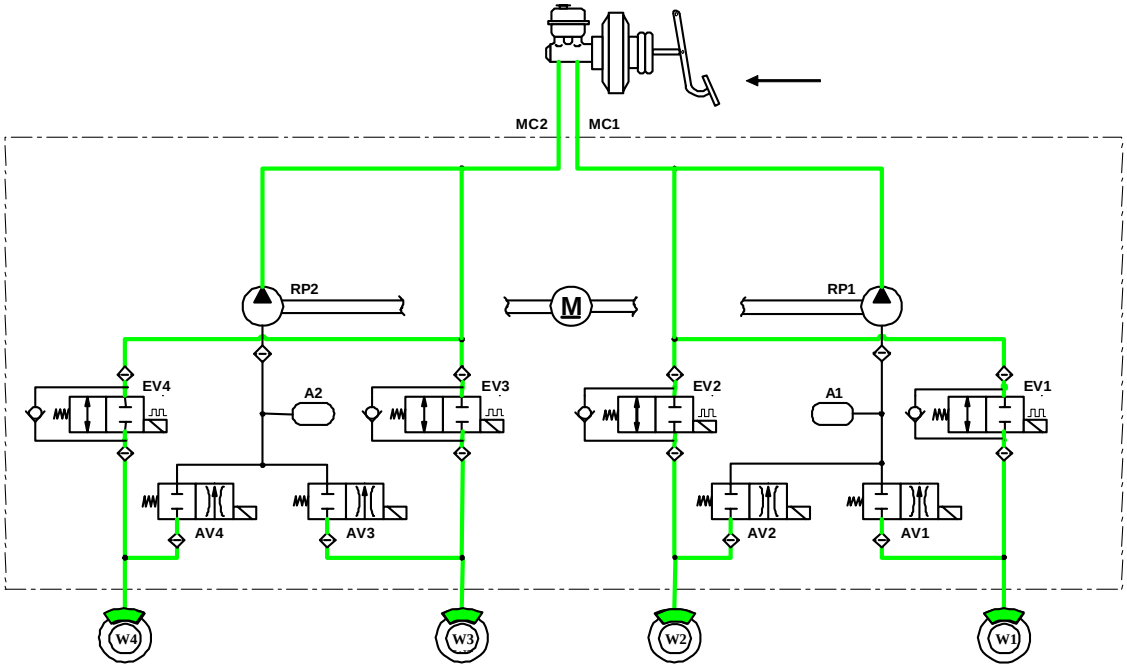

备注:
驱动所有的进液阀（关闭），出液阀保持常闭。
主缸与轮缸的连接被断开。
轮缸处的压力与前一增压或减压循环结束时的压力相等。
在操作者不松开制动踏板的情况下，制动踏板保留在此位置不动。
在操作者施加基础制动之后，通过保压为接下来的 ABS 动态测试做准备。
在增压和减压循环之后，保压功能可以用于避免阀的损坏。

Remarks:
All inlet valves are energized (closed), the outlet valves stays normally closed.
The connection between master cylinder and wheel calliper stays isolated.
The pressure in the callipers will be the same than after the previous increase or decrease cycle.
The brake pedal will stay in this position (operator not to release brake pedal).
This function is used after the base brake apply has been initiated by he operator to keep the pressure constant for the following dynamic ABS test.
It is also used after each pressure increase and release cycle to avoid any damage of the valves.

©博世保留商标和专利应用在内的所有权力，未经我公司许可不得复制或传递给第三方。

© All rights with Robert Bosch GmbH, including trademark / patent applications. Any right of disposal, as copying and distribution to third parties is ours.

减压（以第一个车轮为例）Function Pressure Dump (release function)（Wheel 1 as a example）

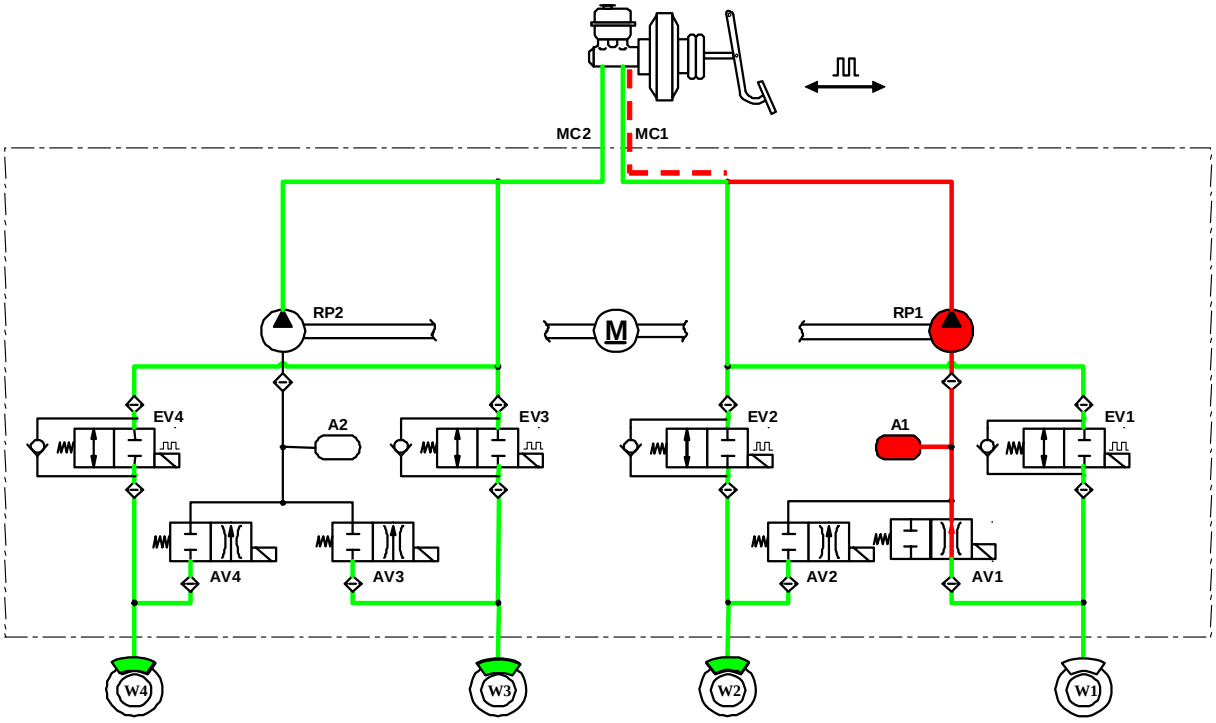

备注:
第一个轮出液阀和所有进液阀都被驱动。关闭所有进液阀，打开第一个轮出液阀。驱动泵电机。
主缸与轮缸的连接被断开。
由于蓄压器吸入制动液，卡钳处的压力降低，然后通过泵将制动液返回到主缸中。
制动踏板将会反弹（踏板反馈）。
此功能用于减压循环。
在对所有轮实施最后一次阀驱动后（在测试结束时），为排空蓄能器泵马达必须滞后两秒再停止工作。

Remarks:
All inlet valves and the outlet valve FL are energized, all inlet valves are closed, outlet valve FL is opened. The pump motor is activated.
The connection between master cylinder and wheel calliper is isolated.
The pressure in the callipers will be reduced by absorbing the brake fluid in the accumulator and then by recirculation the brake fluid towards the master by the pump.
The brake pedal will move backwards (pedal feedback).
This function is used for the pressure release cycles.
The pressure decrease at the calliper is modulated by cycling the outlet valve.

After the last valve actuation of all wheels, (at the end of the entire test) and a unpressurized system, the pump motor should be actuate two seconds longer to discharge the accumulator chamber.

©博世保留商标和专利应用在内的所有权力，未经我公司许可不得复制或传递给第三方。

© All rights with Robert Bosch GmbH, including trademark / patent applications. Any right of disposal, as copying and distribution to third parties is ours.

4 诊断功能 Diagnosis Function

4.1 建立扩展诊断模式 Start Extended Diagnostic Session

建立扩展诊断模式 Start Extended Diagnostic Session	
操作者 Operator:	测试设备/ECU Tester / ECU:
→关闭点火开关。Ignition off. →连接诊断接口。Connect diagnostic interface . →打开点火开关。Ignition on. →等待 ABS 系统自检（点火后初始化测试）结束： Wait till the ABS system check (initial tests after ignition on) is finished:	建立扩展诊断模式 Start Extended Diagnostic Session。

ABS 进入扩展诊断模式，ABS 报警灯被点亮。在下线检测开始时，操作人员应观察 ABS 报警灯状态是否正常。
根据相应的规格，以客户诊断为基础在测试仪和电子控制单元之间建立通信。
在 ABS 系统通电之后，可以立即起动。
如果未成功建立通信，在测试中断之前应重复大约 3 次。

通信不成功 ⇒ 设置故障信息，终止
通信成功 ⇒ 继续

When ABS start extended diagnostic session, ABS warning light will be turn on. At the beginning of EOL test, operator should observe the ABS warning light to judge whether the warning light status is right or not.
The communication set up between the Tester and the ECU is based on the customer diagnosis according to the corresponding specification.
It can be started immediately after the system is powered up.
In case of a non successful communication set up repeat for about 3 times before the test is interrupted.

Communication not successful ⇒ set failure message, abort
Communication successful ⇒ continue

©博世保留商标和专利应用在内的所有权力，未经我公司许可不得复制或传递给第三方。

© All rights with Robert Bosch GmbH, including trademark / patent applications. Any right of disposal, as copying and distribution to third parties is ours.

4.2 电子控制单元识别 ECU-Identification

电子控制单元识别 ECU Identification	
测试设备 Tester	电子控制单元 ECU
电子控制单元识别 ECU identification	电子控制单元数据输出 Output of the requested ECU data
关于“电子控制单元识别”更多信息请参考客户诊断功能描述。More information to the chapter “ECU identification” is to be inferred from the customer specific documentations.	

电子控制单元识别是检查 ABS 与车辆是否匹配，防止生产线对 ABS 的错装。
待评估的电子控制单元识别数据必须由客户及其装配工厂确认。
电子控制单元识别数据必须和下线检测设备中存储的默认数据进行对比，以确保所选择的阀启动程序正确无误。
当 ABS 软件升级时，电子控制单元识别数据将发生变更，因此诊断仪和抽真空加注设备中的数据库应当能用编辑菜单进行方便的升级。关于“电子控制单元识别”更多信息请参考客户诊断功能描述。

未知系统 ⇒ 终止测试
正确系统 ⇒ 继续

The intention of ECU identification is checking whether ABS can match the vehicle or not, and preventing operator from assembling unsuitable ABS.
The to be evaluated ECU identification data must be confirmed by the customer and its assembly plants.
The ECU identification data must be compared with the in the ecacuation and filling equipment/tester/end of line test equipment software stored desired ECU data. This is required to select the right valve activation sequence.
The ECU identification data might be changed in case of an ABS software update respectively modification, therefore it must be easily possible with editor menu to update the data base of end of line test equipment .
More details to the chapter “ECU identification” are to be inferred from the customer specific documentations.

Unknown System ⇒ Abort Test
System detected ⇒ Continue

©博世保留商标和专利应用在内的所有权力，未经我公司许可不得复制或传递给第三方。

© All rights with Robert Bosch GmbH, including trademark / patent applications. Any right of disposal, as copying and distribution to third parties is ours.

4.3 检查系统状态 Check System Status

检查系统状态 Check System Status	
测试设备 Tester	电子控制单元 ECU
检查系统状态 Check System Status	系统状态数据输出 Output of the requested System Status data
关于“检查系统状态”更多信息请参考客户诊断功能描述。More information to the chapter “Check System Status ” is to be inferred from the customer specific documentations.	

在下线检测过程前诊断设备必须识别 ECU 的状态，主动或被动状态
如果检测任何故障，ECU 会关闭系统并取消阀和电机的动作
下面的失效情形会导致系统的关闭：阀的错误，阀继电器的错误，电机及其继电器的错误
应通过检测软件的数值范围来校验 ECU 的数据

数据错误 ⇒ 设置故障信息，退出
数据正确 ⇒ 继续

Remarks:
Prior to the EOL test process, the diagnostic equipment must identify whether the ECU is active or passive.
In case of any failure detection, the ECU will have disabled the system and have aborted the valve and pump motor activation’s.
Following failures lead to a shut down of the system: all valve faults, VR fault, RFP and MR faults.
The ECU data must be verified with the limit data of the tester software.

Data correct ⇒ Continue
Data not correct ⇒ Failure message, abort

©博世保留商标和专利应用在内的所有权力，未经我公司许可不得复制或传递给第三方。

© All rights with Robert Bosch GmbH, including trademark / patent applications. Any right of disposal, as copying and distribution to third parties is ours.

4.4 读取抽真空加注过程字节 Read E&F Process Byte

读取抽真空加注过程字节 Read E&F Process Byte	
测试设备 Tester	电子控制单元 ECU
请求并评估过程字节。 Requests and evaluates the process bytes.	读取 EEPROM 中的过程字节并回复给测试设备。 Reads the process bytes from the EEPROM and responses the requested data.
关于“读取抽真空加注过程字节”更多信息请参考客户诊断功能描述。More information to the chapter “Read E&F Process Byte ” is to be inferred from the customer specific documentations.	

加注字节识别先前的在线真空加注或离线排气是否正确运行。
在转毂处评估过程字节的前提是抽真空加注和排气设备具有写入字节的功能。
在抽真空加注过程后或排气程序执行完毕，随着 ROM 程序的结束，电子控制单元检查阀继电器的状态。如果阀继电器的状态是正常的，电子控制单元把“AA Hex”写入加注字节。此值表示完全成功的真空加注过程。
如果上述过程有任何的错误，那么“00 Hex”写入加注字节，此值表示真空加注过程未完成。
如果过程执行了，但有问题存在，那么“EE Hex”写入加注字节，表示加注完成但不成功
博世发货状态字节是“FF Hex” 。

过程字节不正确 ⇒ 打印错误信息，退出
过程字节正确 ⇒ 继续

The process control byte identifies whether the previous on line evacuate/fill process or the off line repair bleed process has been executed correctly.
The precondition to evaluate the process control byte at the end of line tests must be that the ecacuate/fill equipment and repair bleed equipment have the capability to write the process byte.
The tester writes the process control byte after the evacuation and fill or the repair bleed process. With finishing of the ROM resident functions at the end of the fill or repair bleed cycle the tester checks the valve relay status and if the status not disabled and the evac/fill or repair bleed process has been executed correct, the tester writes the process control byte to the value “AA Hex”. This value indicates a complete successful evacuation and fills process.
If there was a problem while the evac/fill or repair bleed process and the ROM resident routine early interrupted the tester write the value “00 Hex” This value indicates filling in not complete.
If the process conclude, but there was a problem the tester write the value “EE Hex” This value indicates filling in complete and NOK.
Delivery status of the Bosch plant is “FF Hex”.

Process byte incorrect ⇒ Print out fault message , abort
Process byte correct ⇒ Continue

©博世保留商标和专利应用在内的所有权力，未经我公司许可不得复制或传递给第三方。

© All rights with Robert Bosch GmbH, including trademark / patent applications. Any right of disposal, as copying and distribution to third parties is ours.

4.5 写入变量代码 ※ Write Variant Code ※

Write Variant Code (e.g. engine- and gear box variant, vehicle identification number, etc.)写入变量代码（例如发动机和变速器变量，车架号（VIN）等）	
测试设备 Tester	电子控制单元 ECU
1. 开始 ABS ECU 登录程序。 Start of the login procedure for the ABS ECU. 2. 开始 ABS ECU 编码程序。 Start of the coding procedure for the ABS ECU.	1. ECU 发送种子信息，检查接收到的登录密钥并开放访问权限。 ECU sends the seed, checks the received login key and allows access. 2. ECU 在 EEPROM 中储存编码数据。 ECU stores the coding data in the EEPROM.

客户可以通过发动机，变速箱等设置多种配置。
该功能并不适用于所有项目，详细内容请参考相应项目的诊断功能描述

Customer can set up some variant codes via engine, transmission and so on.
The function doesn’t adapt to all the projects, details refers to relative diagnosis specification.

写入变量编码成功 ⇒ 继续下线检测流程
写入变量编码不成功 ⇒ 退出，打印错误信息并将车辆送至维修区

Coding successful ⇒ Continue
Coding not successful ⇒ Abort, print out fault message and send vehicle to repair area

©博世保留商标和专利应用在内的所有权力，未经我公司许可不得复制或传递给第三方。

© All rights with Robert Bosch GmbH, including trademark / patent applications. Any right of disposal, as copying and distribution to third parties is ours.

4.6 读取故障代码 Read Status Of DTC

读取故障代码 Read Status Of DTC	
测试设备 Tester	电子控制单元 ECU
对所有相关故障码记录进行评估 Evaluation of all relevant fault code entries	输出所有存储的故障码 Output of all stored fault codes
关于“读取故障代码”更多信息请参考客户规范文件。More information about the chapter “read status of DTC” is to be inferred from the customer specific documentations.	

ECU 输出所包含的所有故障码，数据包括几种信息。最大存储个数是 10 个，输出的和实际存在的个数相等。
输出数据应评估：
- 故障码个数
- 故障码状态

测试设备应能输出故障码并报文，只有永久故障码存在才能取消测试，历史故障码应被忽略。
有当前故障码 ⇒ 取消测试
无当前故障码 ⇒ 继续（忽略历史故障码）

The ECU outputs the content of the entire fault code memory. This data include several informations. The maximum number of stored faults is 10. The number of the transmitted fault codes is equal to the number of stored fault codes.
Out of the transmitted data, the following must be evaluated:
- Fault code number (DTC)
- The status of DTC

The tester has to evaluate the fault code data, to transform the number into a failure text and to issue a protocol. Only permanent faults will lead to abort the test cycle. History faults must be ignored.
Current fault present ⇒ Abort test
No current fault present ⇒ Continue (Ignore faults)

情形：
根据 ECE13 的规定，轮速传感器的故障有可能在前一工位的操作中存储并以当前故障码形式存在，因此所有的轮速传感器故障（当前的历史的）在评估中均应忽略，下一步将在轮速传感器的测试中进行检测。
Conditions:
Due to the ECE13-Regulation, wheel speed sensor faults that may have been stored in the ECU by previous assembly equipment will stay stored as current faults. Therefore, all wheel speed sensor (current and history) must be ignored during the evaluation. These faults will be detected in following test step “wheel speed sensor test”.

©博世保留商标和专利应用在内的所有权力，未经我公司许可不得复制或传递给第三方。

© All rights with Robert Bosch GmbH, including trademark / patent applications. Any right of disposal, as copying and distribution to third parties is ours.

4.7 清除故障代码 Clear DTC

清除故障码Clear fault code memory	
测试设备 Tester	电子控制单元 ECU
清除故障码内存 Clearing of the fault code memory	故障码内存被清除 Fault code memory is erased.
关于“清除故障码”更多信息请参考客户规范文件。More information to the chapter “Clear fault code memory ” is to be inferred from the customer specific documentations.	

根据系统调节和车辆线束的安装情况，故障代码可能在下线检测过程中已保存在电子控制单元内。
清除故障码成功 ⇒ 继续
清除故障码不成功 ⇒ 打印错误信息，继续

Depending to the adaptation onto the system and the installation of the vehicle harness, fault codes may have been stored in the ECU during the EOL process.

Clearing DTC successful ⇒ Continue
Clearing DTC not successful ⇒ Print out fault message, continue

©博世保留商标和专利应用在内的所有权力，未经我公司许可不得复制或传递给第三方。

© All rights with Robert Bosch GmbH, including trademark / patent applications. Any right of disposal, as copying and distribution to third parties is ours.

4.8 禁用速度限制和阀组继电器关闭 Speed limit and Valve relay shut down deactivation

禁用速度限制和阀组继电器关闭 Speed limit and Valve relay shut down deactivation	
测试设备 Tester	电子控制单元 ECU
1. 禁用速度限制 Speed limit deactivation 2. 禁用阀组继电器关闭 Valve relay shut down deactivation	1. 永久控制速度限制功能 Start permanent control speed limit function 2. 永久控制阀组继电器关闭功能 Start permanent control valve relay shut down function
关于“禁用速度限制和阀组继电器关闭”更多信息请参考客户规范文件。More information to the chapter “Speed limit and Valve relay shut down deactivation” is to be inferred from the customer specific documentations.	

如是进入高速转毂动态测试（速度>10kph），请使用本服务指令确保速度限制已被禁用。

永久控制成功 ⇒ 继续下线检测流程
永久控制不成功 ⇒ 退出，打印错误信息并将车辆送至维修区

If EOL test was carried out on high speed roll (speed>10kph) ,please apply this service to verify speed limit deactivated.

Start permanent control successful ⇒ Continue
Start permanent control not successful ⇒ Abort, print out fault message and send vehicle to repair area

©博世保留商标和专利应用在内的所有权力，未经我公司许可不得复制或传递给第三方。

© All rights with Robert Bosch GmbH, including trademark / patent applications. Any right of disposal, as copying and distribution to third parties is ours.

4.9 开始轮速传感器测试 Start WSS Test

开始轮速传感器测试 Start WSS test	
测试设备 Tester	电子控制单元 ECU
1. 转毂带动车轮转动 Roller dynamometer run wheels 2. 开始轮速传感器测试 Start WSS test	记录传感器测试过程中每个车轮的轮速信号 Record WSS signal of every wheel during WSS test
关于“开始轮速传感器测试 ”更多信息请参考客户规范文件。More information to the chapter “Start WSS test” is to be inferred from the customer specific documentations.	

轮速传感器测试可以检查轮速传感器的相关性，防止轮速传感器的错装。
轮速传感器测试可以检查轮速传感器的信号质量，保证轮速传感器能够正常的工作。
轮速传感器测试时间必须大于单个轮子转动一周的时间。
具体的轮速传感器的测试方法请参考章节 3.1。

WSS test can check WSS relativity to avoid wss assembled unsiutedly.
WSS test can check WSS signal quality to ensure WSS can work normally.
WSS test execution time must be longer than one tire’s full round rolling spend time .
Detail WSS test methods refer to chapter 3.1.

©博世保留商标和专利应用在内的所有权力，未经我公司许可不得复制或传递给第三方。

© All rights with Robert Bosch GmbH, including trademark / patent applications. Any right of disposal, as copying and distribution to third parties is ours.

4.10 评估轮速传感器测试 Evaluation of WSS Test

评估轮速传感器测试 Evaluation of WSS test	
测试设备 Tester	电子控制单元 ECU
评估轮速传感器测试 Evaluation of WSS test	输出轮速传感器测试过程中每个车轮轮速的最大值和最小值 Output of the max value and min value of every wheel during WSS test
关于“评估轮速传感器测试”更多信息请参考客户规范文件。More information to the chapter “Evaluation of WSS test” is to be inferred from the customer specific documentations.	

只有在“执行状态”为完成时，才有轮速数据输出。
轮速传感器测试要求车轮至少转动一周。
下线检测设备必须拿轮速传感器测试结果与转毂速度和允许误差进行评估：

轮速不合格 ⇒ 取消测试
轮速合格 ⇒ 继续

WSS data is only sent if the “Routine Status = Routine finished”.
The test should be done during at least one complete wheel rotation.
EOL test equipment should evaluate the WSS test result with the tolerance and roller speed.

WSS result ineligible ⇒ Abort Test
WSS result eligible ⇒ Continue

©博世保留商标和专利应用在内的所有权力，未经我公司许可不得复制或传递给第三方。

© All rights with Robert Bosch GmbH, including trademark / patent applications. Any right of disposal, as copying and distribution to third parties is ours.

4.11 动态测试 Dynamic Test

博世推荐的动态测试过程如下 Following is dynamic test process that Bosch recommend：

测试步骤 Test Step:	操作和功能 Operate and Function:
01	操作员实施制动并保持制动踏板恒定 Operator apply brake pedal and keep brake pedal constant
02	泵电机启动 Pump motor on
03	全部进液阀得电 All EV on
04	左前轮减压：左前出液阀先得电，然后断电 Pressure decrease pulse FL: FL AV on, then off
05	左前轮增压并保压：左前进液阀先断电，然后得电 Pressure increase and hold pulse FL: FL EV off, then on
06	右前轮减压：右前出液阀先得电，然后断电 Pressure decrease pulse FR: FR AV on, then off
07	右前轮增压并保压：右前进液阀先断电，然后得电 Pressure increase and hold pulse FR: FR EV off, then on
08	左后轮减压：左后出液阀先得电，然后断电 Pressure decrease pulse RL: RL AV on, then off
09	左后轮增压并保压：左后进液阀先断电，然后得电 Pressure increase and hold pulse RL: RL EV off, then on
10	右后轮减压：左前出液阀先得电，然后断电 Pressure decrease pulse RR: RR AV on, then off
11	右后轮增压并保压：右后进液阀先断电，然后得电 Pressure increase and hold pulse RR: RR EV off, then on
12	操作员松开制动踏板 Operator release brake pedal
13	全部进液阀失电 All EV off
14	泵电机继续转动 2000ms 后关闭 Pump after 2000 ms off

电机自始至终都在动作。操作者踩下制动踏板使得每个车轮达到设备设定的制动力，然后测试设备关闭所有进液阀保持压力，这一步是测试基础制动系统。然后所有出液阀开启，释放压力。动态测试执行在每个轮子上的压力的释放和增加的循环。
关闭所有进液阀后电机还要运行 2 秒，目的是排空蓄能器。
在压力增加和压力减少的循环中使用固定的时间以便进行数值的测量。
所有的动作均应通过试验确定。

时间设置必须根据不同的测试设备和车型来决定！所有博世推荐的时间值必须通过试验来确定，该试验由客户来完成。

©博世保留商标和专利应用在内的所有权力，未经我公司许可不得复制或传递给第三方。

© All rights with Robert Bosch GmbH, including trademark / patent applications. Any right of disposal, as copying and distribution to third parties is ours.

The pump motor runs from the beginning to the end of the entire test. The operator has to achieve a sufficient brake force, than the tester set all inlet valves to pressure hold. This test step is for the execution of the base brake test. After the base brake test all outlet valves will be switch on and off to release the locked pressure. Then the dynamic test will be started with pressure release and increase cycles at the once wheels.
Switch all inlet valves off as well as the pump motor after 2000ms. This delay time is needed to discharge the accumulator chamber.
Between the pressure increases and pressure releases cycles must be a stabilization time before the force values can be measured.
All activation times should be defined by trials.

The timings must be individually suited per the dynamic behavior of the vehicle on the test rig!
All proposed times are recommended values by Bosch and must be confirmed by trials. These trials must be done by the customer.

©博世保留商标和专利应用在内的所有权力，未经我公司许可不得复制或传递给第三方。

© All rights with Robert Bosch GmbH, including trademark / patent applications. Any right of disposal, as copying and distribution to third parties is ours.

4.12 写入下线检测过程控制字节 Write EOL Test Process Control Byte

写入下线检测过程控制字节 Write EOL process Control byte	
测试设备 Tester	电子控制单元 ECU
写入下线检测过程控制字节 Write EOL process Control byte	将下线检测过程结果写入 ABS 系统的 EEPROM Writes the process results into the EEPROM of the ABS system
关于“写入过程字节”更多信息请参考客户诊断功能描述。More information to the chapter “Write process bytes” is to be inferred from the customer specific documentations.	

博世交付的产品预写入值为 FFH Bosch delivery state is FFH.
电子控制单元用预定义的程序字节“FF 十六进制”送到客户的装配线。该号码被博世保留，以防一个不成功的通讯该数据将还保留在电子控制单元的电可擦除可编程只读存储器中。
在成功的下线检测的情形下，将写入客户定义的数值，该数值应得到测试软件的校验。

写入字节成功 ⇒ 继续
写入字节不成功 ⇒ 打印错误信息，继续

The ECU is shipped to the customers’ assembly line with a predefined process byte: “FF Hex”. In case of a non successful communication this data will still stay in the EEPROM of the ECU (“incorrect“).
In case of a successful EOL process the value will be changed in a defined value of the customer. The ECU data must be verified with the limit data of the tester software.

Write process bytes ok ⇒ Continue
Write process bytes nok. ⇒ Print out fault message, continue

©博世保留商标和专利应用在内的所有权力，未经我公司许可不得复制或传递给第三方。

© All rights with Robert Bosch GmbH, including trademark / patent applications. Any right of disposal, as copying and distribution to third parties is ours.

4.13 激活速度限制和阀组继电器关闭 Speed limit and Valve relay shut down activation

激活速度限制和阀组继电器关闭 Speed limit and Valve relay shut down activation	
测试设备 Tester	电子控制单元 ECU
1. 激活速度限制 Speed limit activation 2. 激活阀组继电器关闭 Valve relay shut down activation	1. 停止控制速度限制功能 Stop control speed limit function 2. 停止控制阀组继电器关闭功能 Stop control valve relay shut down function
关于“激活速度限制和阀组继电器关闭”更多信息请参考客户规范文件。More information to the chapter “Speed limit and Valve relay shut down activation” is to be inferred from the customer specific documentations.	

完成动态测试后，应激活速度限制和阀组继电器关闭的功能，使 ABS 件恢复默认状态。
除通过命令来激活速度限制和阀组继电器关闭功能外，该步骤还可以通过复位点火开关来实现。

停止控制成功 ⇒ 继续下线检测流程
停止控制不成功 ⇒ 打印错误信息，继续

After dynamic test, should make speed limit and valve relay shut down activation to make ABS come back to default status.
Operatoer can send commands to realize the function of Speed limit and valve relay shut down activation, besides it also can be realized by reset ignition switch.

Stop control successful ⇒ Continue
Stop control not successful ⇒ Print out fault message, continue

©博世保留商标和专利应用在内的所有权力，未经我公司许可不得复制或传递给第三方。

© All rights with Robert Bosch GmbH, including trademark / patent applications. Any right of disposal, as copying and distribution to third parties is ours.

4.14 进入安全模式 Security Access

进入安全模式 Security Access	
测试设备 Tester	电子控制单元 ECU
申请种子 Request Seed	发送种子 Send Seed
将种子换算成密钥，并发送钥匙 transform seed into key, send key	进入安全模式 enter security unlocked mode
关于“进入安全模式”更多信息请参考客户规范文件。More information to the chapter “Security Access” is to be inferred from the customer specific documentations.	

部分诊断功能是需要在安全模式下执行的，具体详见相应项目的诊断功能描述文件。
进入安全模式分为以下几步：
获得种子 → 将种子换算成密钥 → 发送密钥 → 进入安全模式
种子与密钥的换算方法详见相应项目的安全算法文件。

Some diagnisis function command must be ran in security unlocked mode, details refer to relative “Functional Description of Diagnosis” .
Security access need the following steps:
Request seed → transform seed into key → send key to ECU → enter security unlocked mode
The method of transforming seed into key refers to relative security access file for relative project.

©博世保留商标和专利应用在内的所有权力，未经我公司许可不得复制或传递给第三方。

© All rights with Robert Bosch GmbH, including trademark / patent applications. Any right of disposal, as copying and distribution to third parties is ours.

4.15 结束扩展诊断模式 End of Extended Diagnosis Session

结束扩展诊断模式 End of Extended Diagnosis Session	
测试设备 Tester	电子控制单元 ECU
退出客户指定诊断模式 Leaving of the customer specific diagnostic mode.	退出客户指定诊断模式 Leaves the customer specific diagnostic mode.
关于“结束扩展诊断模式”更多信息请参考客户规范文件。More information to the chapter “End of Extended Diagnosis Session” is to be inferred from the customer specific documentations.	

ABS 结束扩展诊断模式，ABS 报警灯熄灭。在下线检测结束时，操作人员应观察 ABS 报警灯状态是否正常。

When ABS exit extended diagnostic session, ABS warning light will be turn off. At the end of EOL test, operator should observe the ABS warning light to judge whether the warning light status is right or not.

©博世保留商标和专利应用在内的所有权力，未经我公司许可不得复制或传递给第三方。

© All rights with Robert Bosch GmbH, including trademark / patent applications. Any right of disposal, as copying and distribution to third parties is ours.

5 阀保护措施和液压数据 Valve protective measures and hydraulic data

	ABS
Valve:	**诊断模式 Diagnostic mode**
EV **7,3 Ω**	If UVR > 9V, than lowering of the duty cycle to Ueff = 9V; If valve activation value > 0%; than start the up/down counter and count with a ratio up/down = 2/1; limited to 120s; for each EV valve a separate counter is used 如果 UVR > 9V，则降低占空比至 Ueff = 9V；如果阀启动值 > 0%，则上/下计数器以 2/1 的上/下比开始计数，限时 120s；每个进液阀都有单独的计数器。
AV **7,3 Ω**	如果阀启动值 > 0%（在客户诊断中只允许 100%全时启动），则上/下计数器以 2/1 的上/下比开始计数，限时 30s；每个出液阀都有单独的计数器。 If valve activation value > 0% (via customer diagnosis only full time =100% activation possible); than start the up/down counter and count with a ratio up/down = 2/1; limited to 30s; for each AV valve a separate counter is used

备注：
在诊断模式下，所有阀保护措施都被激活，无法关闭。
Remarks:
All valve protection measurements are active in the diagnostic mode. These measurements can not be switched off.

©博世保留商标和专利应用在内的所有权力，未经我公司许可不得复制或传递给第三方。

© All rights with Robert Bosch GmbH, including trademark / patent applications. Any right of disposal, as copying and distribution to third parties is ours.

Gen 9: Valve protection measure: Up/down counter with a ratio of = 2/1

Example: Outlet valve with a maximum limitation to 30 seconds

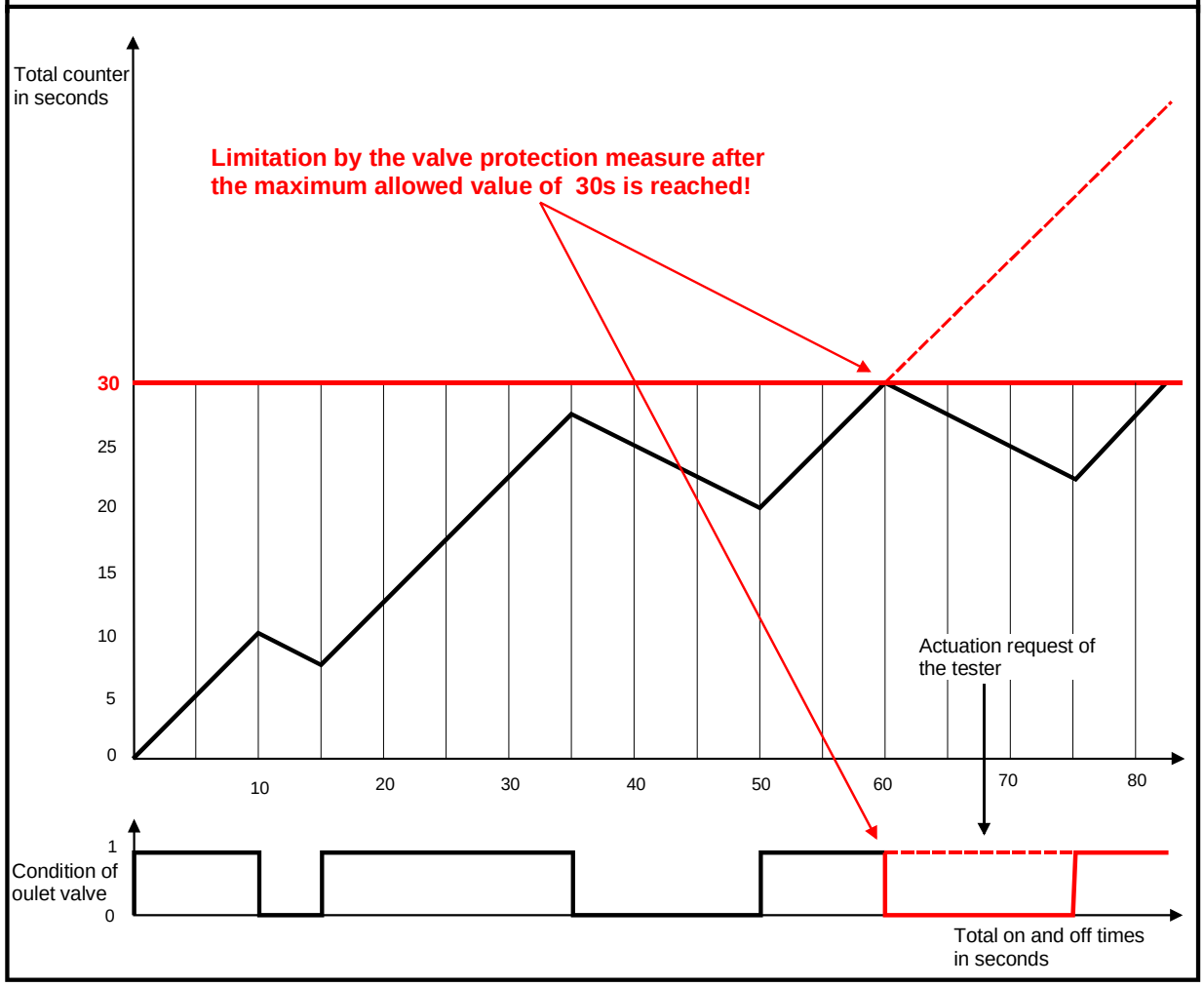

备注：
阀保护措施强制保护阀电磁线圈与 ECU 免于过热。冷却时间足够后阀组方能再度启动。当系统重新启动以后阀保护措施会根据电磁阀线圈的阻值来计算是否需要冷却时间来启动阀。即便是阀保护措施也无法保证阀电磁线圈和 ECU100%安全。因此，客户有责任确保阀启动序列正确！

Remarks:
The forced limitation by the valve protection measure is active as long as valve coils and the ECU are sufficient protected against damages caused by overheating. Only after an appropriate cooling time the valves can be activated again.

©博世保留商标和专利应用在内的所有权力，未经我公司许可不得复制或传递给第三方。

© All rights with Robert Bosch GmbH, including trademark / patent applications. Any right of disposal, as copying and distribution to third parties is ours.

To guarantee a sufficient cooling time also after restart of the system (e.g. ignition cycle) the provided coil resistance values are evaluated by the valve protection measure. The resistance the coils are measured after each system power up and then cyclic all 20 seconds. These values are used to initialize the up and down counter value for the EV and AV coils. Caused by different reasons the described valve protection measurements cannot protect the valve coils and the ECU with 100% safeness. That's the reason why the customer is responsible to ensure a correct valve activation sequence!

©博世保留商标和专利应用在内的所有权力，未经我公司许可不得复制或传递给第三方。

© All rights with Robert Bosch GmbH, including trademark / patent applications. Any right of disposal, as copying and distribution to third parties is ours.

6 设备要求 Equipment Requirement

测功机设计：
该测试可在 4 个独立的转毂上进行。

诊断信息：
诊断电脑和车辆应尽可能的接近，以避免出现任何通讯故障。
为了减少测试时间，消息之间以及消息内部字节之间的时间间隔应尽可能地接近最小可能值。
所有其他的诊断信息和功能都需根据客户要求决定。

标志字节：
抽真空加注的标志字节必须有客户或其抽真空加注/人工排气设备的供应商确定。

轮速传感器测试：
在检查轮速传感器相关性时，如果有可能，通过设置不同的时间延迟使每个车轮在不同的时间开始转动。

阀动态测试：
为了最小化整个测试时间，减压/增压循环可以重叠。

编辑菜单：
在生产过程中，由于软件的升级，可能需要修改 ECU 的识别码，所以编辑菜单的设置对于修改识别码非常重要。
阀的动态测试时间设置必须通过试验尝试确定。
阀的动作循环时间设置，例如执行时间和稳定时间，必须包含在编辑菜单中。
为了简单的修改，编辑菜单中同样需要包含待评估数据的上、下限值。

车辆型号（车重，长短轴局，车身型号）：
由于存在各种不同型号和结构的车辆，在 ABS 动态测试的电磁阀工作循环过程中，可能需要不同的执行次数。这些数据必须存在测试设备的单独参数文件中，并且易于通过编辑菜单修改。当进入测试设备时，应该通过条形码或者操作者的选择完成车辆型号的选择。

测试协议：
如果实验结果正确，打印“测试通过”。
如果测试结果不良，必须打印失败结果。
失败结果必须包括测试失败步骤的所有测试数据以便于原因分析。
必须按要求提供所有实验结果的测试协议。

车辆状态：
为了向系统充分供电，蓄电池必须完全充电。为了保持供电正常，发动机可保持工作。

Dynamometer design:
The test is designed to be performed on a roller dynamometer.
To allow individual wheel test cycles the rolls of each wheel should be independently driven by the test rig drives.
Diagnostic Information:
The diagnostic computer should be as close as possible near the vehicle to avoid communication problems.

©博世保留商标和专利应用在内的所有权力，未经我公司许可不得复制或传递给第三方。

© All rights with Robert Bosch GmbH, including trademark / patent applications. Any right of disposal, as copying and distribution to third parties is ours.

The timing (time gaps between messages and bytes within messages) should be set close to the minimum possible limits in order to reduce the test time.
All other additional diagnostic information and functions is customer specific.
Process Byte:
The final definition of the process byte data must be taken from the supplier of the evac/fill- and repair bleed equipment or the customer.

Wheel Speed Sensor Test:
The correlation check is executed by starting the individual rolls with a delay between each wheel if possible.

Dynamic Valve Tests:
To minimize the entire test time, the pressure release / increase cycles can be overlapped.

Editor menus:
ECU Identification codes may change during production due to updates of software revisions.
It is important to set up the software program to modify identification numbers easily by using an editor menu.
The timing of the dynamic valve test must be found during test trials.
Timing of valve actuation cycles, such as actuation times and stabilization times should be included in an editor menu.
Upper and lower limit values for evaluation should also be included in an editor menu for simple adaptation or modifications.

Vehicle Types (weight, long wheel base, short wheel base, body type):
Due to the various vehicle types and configurations, different actuation times for the valves cycles of the dynamic ABS test might be required. These data should be available in separate parameter file within the test equipment software and also easily be modified by using an editor menu.
The selection of the vehicle type should be done by either a bar code reading or an operator selection when driving into the test rig.

Test protocol:
In case of an OK test result, a print out (”test passed”) is made.
In case of a NOK test result, a failure protocol must be printed out.
This protocol must include all test data of the test step that failed in order to allow a better failure analysis.
An entire test protocol of all test results must be available on request.

Vehicle conditions:
The battery must be charged properly in order to allow a sufficient power supply to the system.
The engine can be running in order to apply a sufficient power supply.

©博世保留商标和专利应用在内的所有权力，未经我公司许可不得复制或传递给第三方。

© All rights with Robert Bosch GmbH, including trademark / patent applications. Any right of disposal, as copying and distribution to third parties is ours.